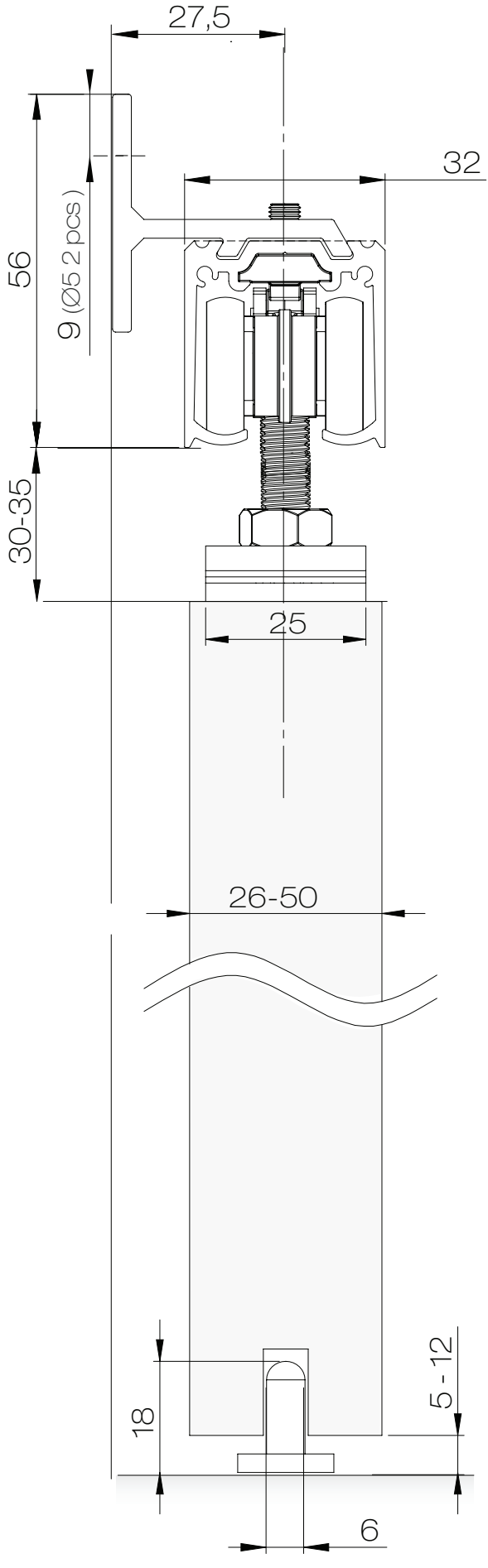
27,5
32
56
9 (Ø5 2 pcs)
30-35
25
26-50
18
5 - 12
6