DESIGN DATA • **SM2 SERIES** • 1/16" DIAMETER CABLE

SHOCK & VIBRATION ISOLATORS

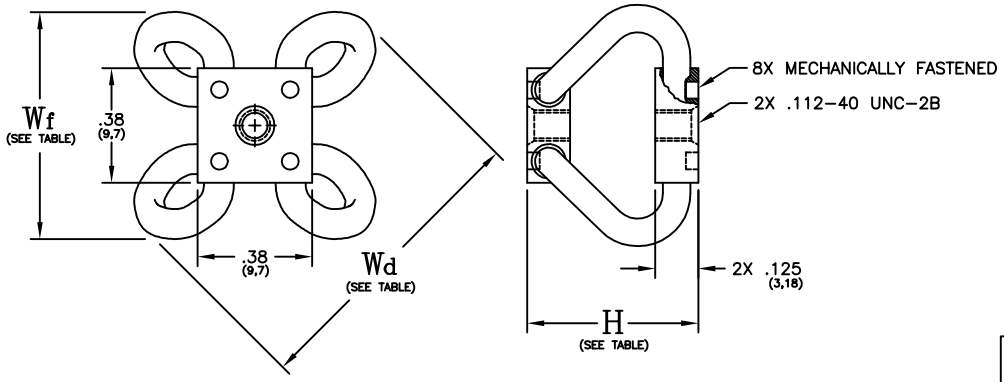

PART NUMBER	DIMENSIONS, in.			ISOLATOR WEIGHT
	H ±.02	Wf (REF)	Wd (REF)	
SM2 – 044 – A	0.44 (11,2)	0.70 (17,8)	0.92 (23,4)	.08oz (2,4gms)
SM2 – 050 – A	0.50 (12,7)	0.78 (19,8)	1.03 (26,2)	.09oz (2,6gms)
SM2 – 062 – A	0.62 (15,7)	0.84 (21,3)	1.10 (27,9)	.10oz (2,8gms)

NOTES:
1) ALL DIMENSIONS IN PARENTHESIS ARE METRIC (mm).
2) SPECIALS AVAILABLE UPON REQUEST (MATERIALS, SIZE, MOUNTING HOLES, FINISH, ETC...)

FEATURES:

- ALL METAL CONSTRUCTION
- UNEQUALLED TEMP. RANGE: −200°F TO 500°F
- THREE AXIS CAPABILITY
- MAINTENANCE FREE
- FAIL SAFE DESIGN
- HIGH DAMPING: C/Cc ≃ .20
- EXCEPTIONAL RELIABILITY

MATERIALS/FINISHES:

- CABLE: 300 SERIES SS PER MIL-W-83420 OR RR-W-410
- INSERTS: 300 SERIES SS PER NAS1130-04-10
- RETAINER BARS: 6063-T52 ALUM ALLOY/CHEM FILM IAW MIL-C-5541, CLASS 1A.

COMPRESSION

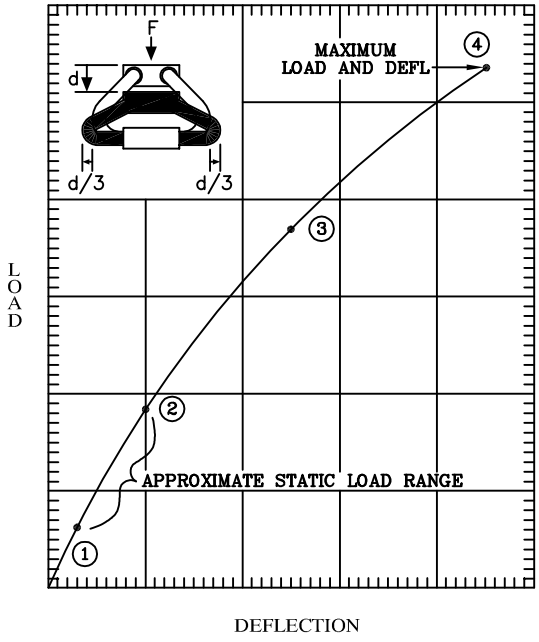

PART NO.	①		②		③		④		K_V (VIBE) (lbs/in)	K_S (SHOCK) (lbs/in)
	LOAD (lbs)	DEFL (in)	LOAD (lbs)	DEFL (in)	LOAD (lbs)	DEFL (in)	LOAD (lbs)	DEFL (in)		
SM2-044-A	2.8	.04	5.4	.10	7.0	.15	8.0	.19	58	47
SM2-050-A	2.1	.04	3.8	.10	5.4	.18	6.3	.25	42	30
SM2-062-A	1.4	.04	2.3	.10	4.0	.24	5.0	.37	26	17

Storm Halvorsen AS
N-3241 Sandefjord
www.stormhalvorsen.no

PERFORMANCE DATA • **SM2** SERIES • 1/16" DIAMETER CABLE

SHOCK & VIBRATION ISOLATORS

ROLL

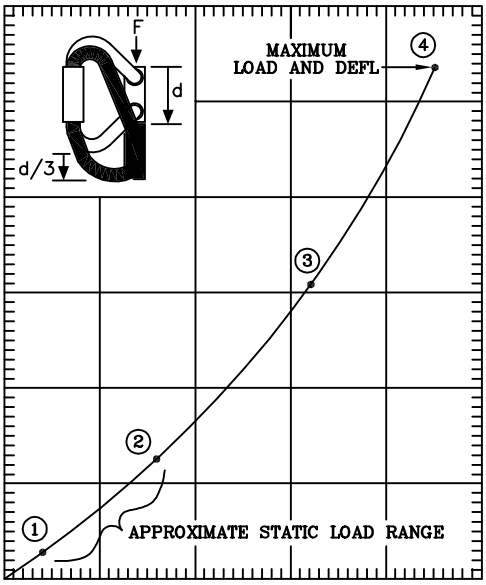

PART NO.	①		②		③		④		K_v (VIBE) (lbs/in)	K_s (SHOCK) (lbs/in)
	LOAD (lbs)	DEFL (in)	LOAD (lbs)	DEFL (in)	LOAD (lbs)	DEFL (in)	LOAD (lbs)	DEFL (in)		
SM2-044-A	1.0	.04	2.2	.10	3.5	.15	4.8	.19	23	23
SM2-050-A	.8	.04	1.6	.10	3.2	.18	4.5	.25	17	18
SM2-062-A	.4	.04	1.0	.10	2.7	.24	5.3	.37	10	12

45° COMPRESSION/ROLL

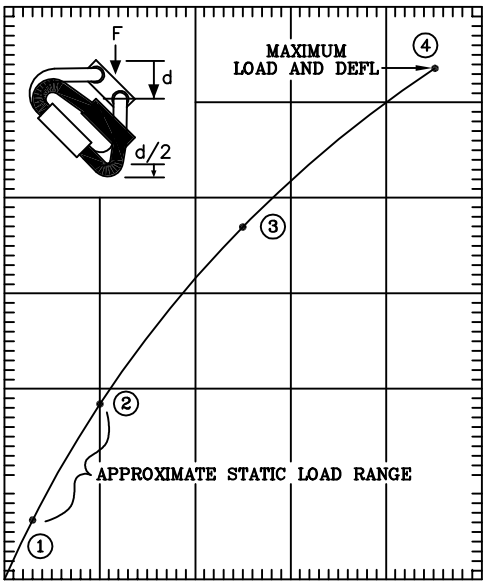

PART NO.	①		②		③		④		K_v (VIBE) (lbs/in)	K_s (SHOCK) (lbs/in)
	LOAD (lbs)	DEFL (in)	LOAD (lbs)	DEFL (in)	LOAD (lbs)	DEFL (in)	LOAD (lbs)	DEFL (in)		
SM2-044-A	1.8	.04	3.7	.10	6.2	.21	7.2	.27	39	30
SM2-050-A	1.2	.04	2.3	.10	3.8	.25	4.6	.35	25	16
SM2-062-A	.6	.04	1.2	.10	2.9	.34	3.8	.52	13	9

Storm Halvorsen AS
N-3241 Sandefjord
www.stormhalvorsen.no